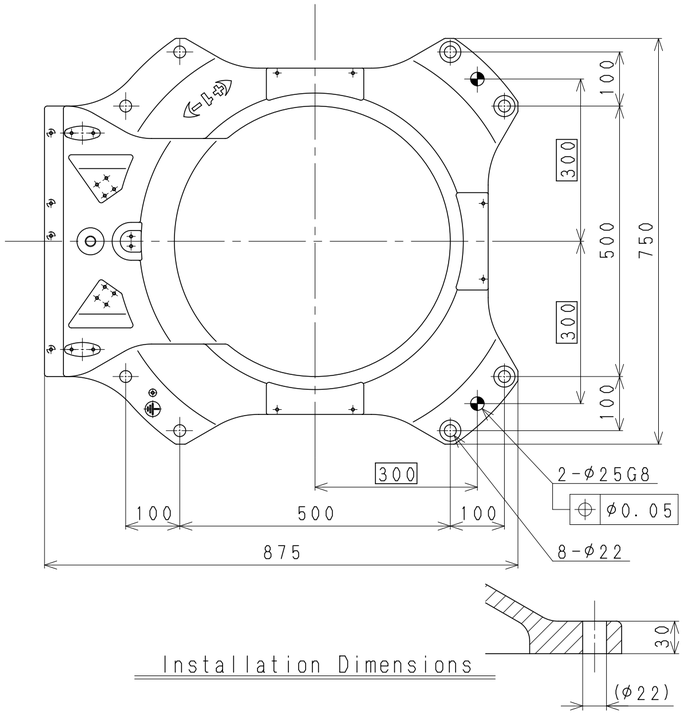

Installation Dimensions

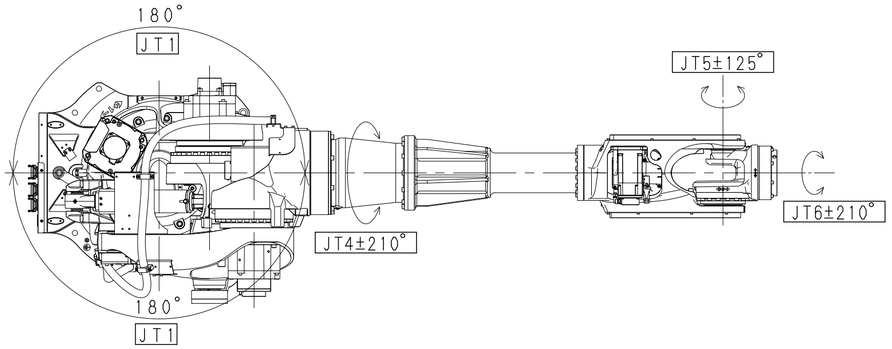

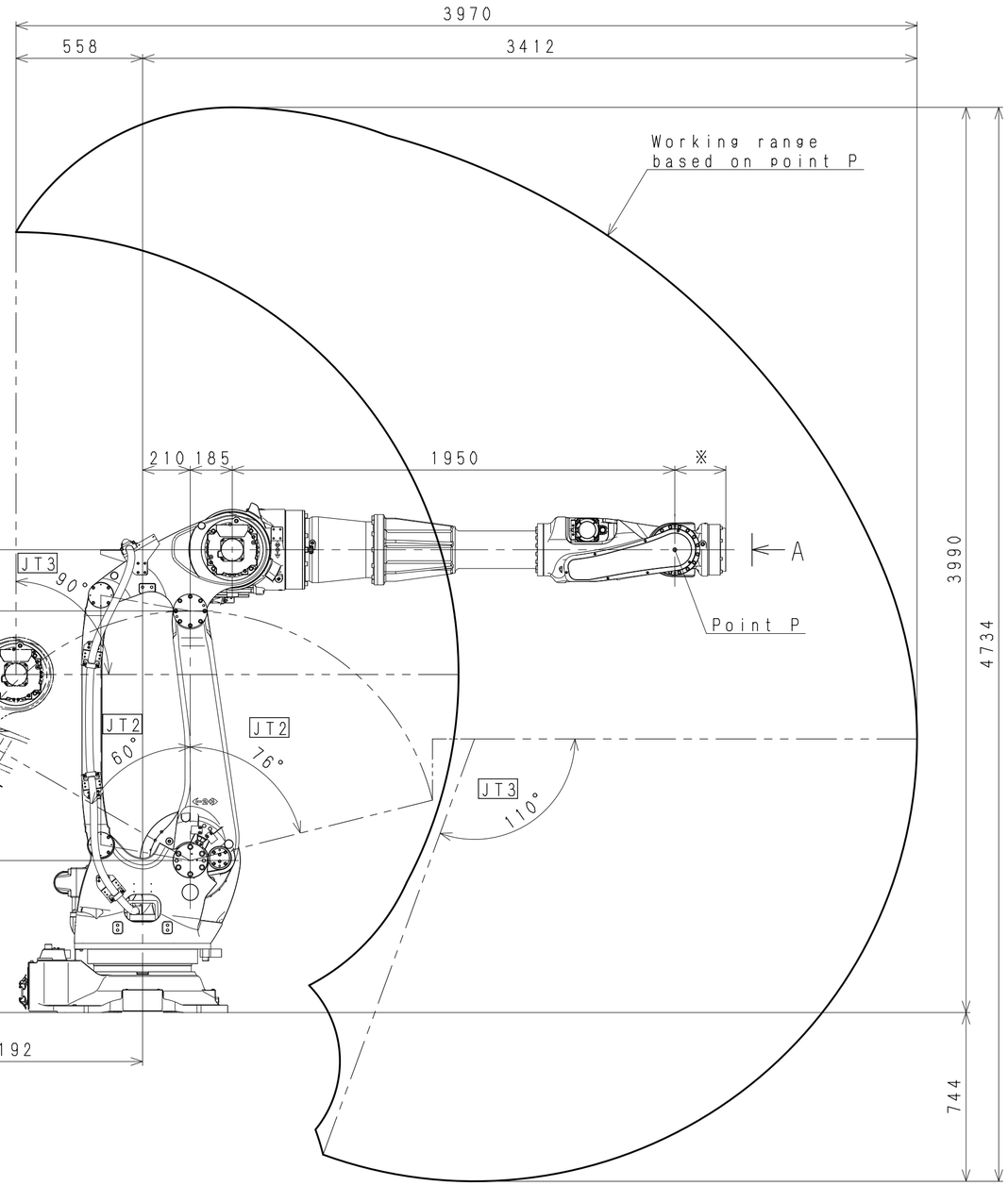

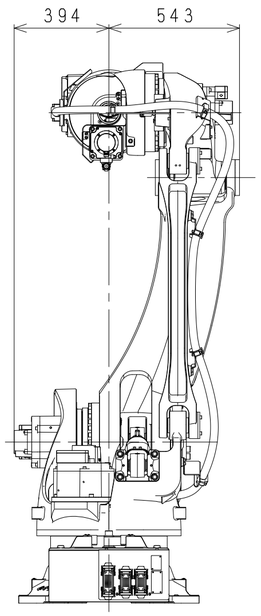

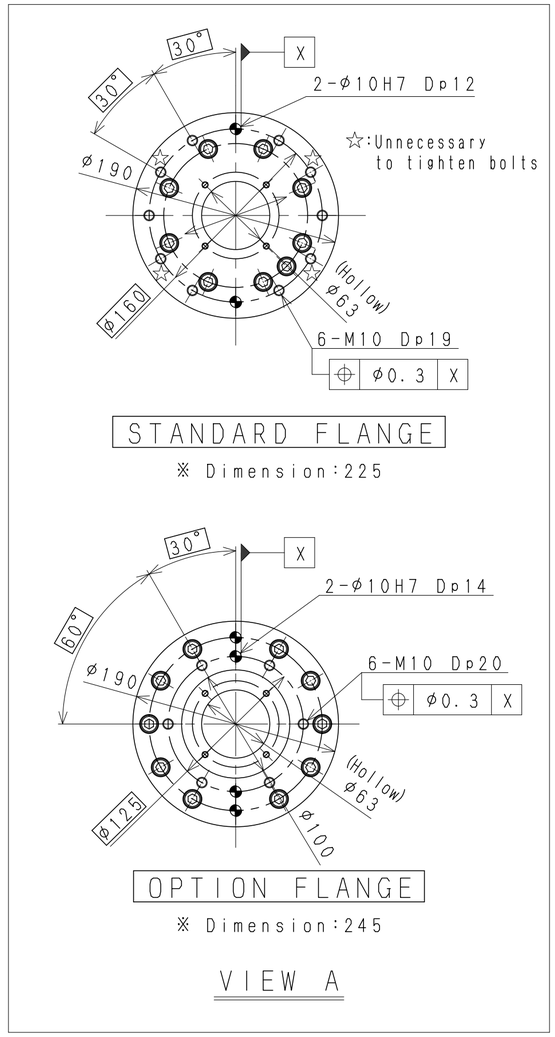

BX200X

WORKING RANGE